ARTWORK APPROVAL

*Please note this line drawing is a guide only and may not include all product details.
Print position may vary slightly due to human error and is considered acceptable.
*Please check all details carefully.

Custom Foldable Umbrella Small
SP033

Umbrella

Product Size: 97cm (Diameter)
Panel Sizes: 36 x 48cm (W x H)
Print Size: 17 x 14cm (W x H)

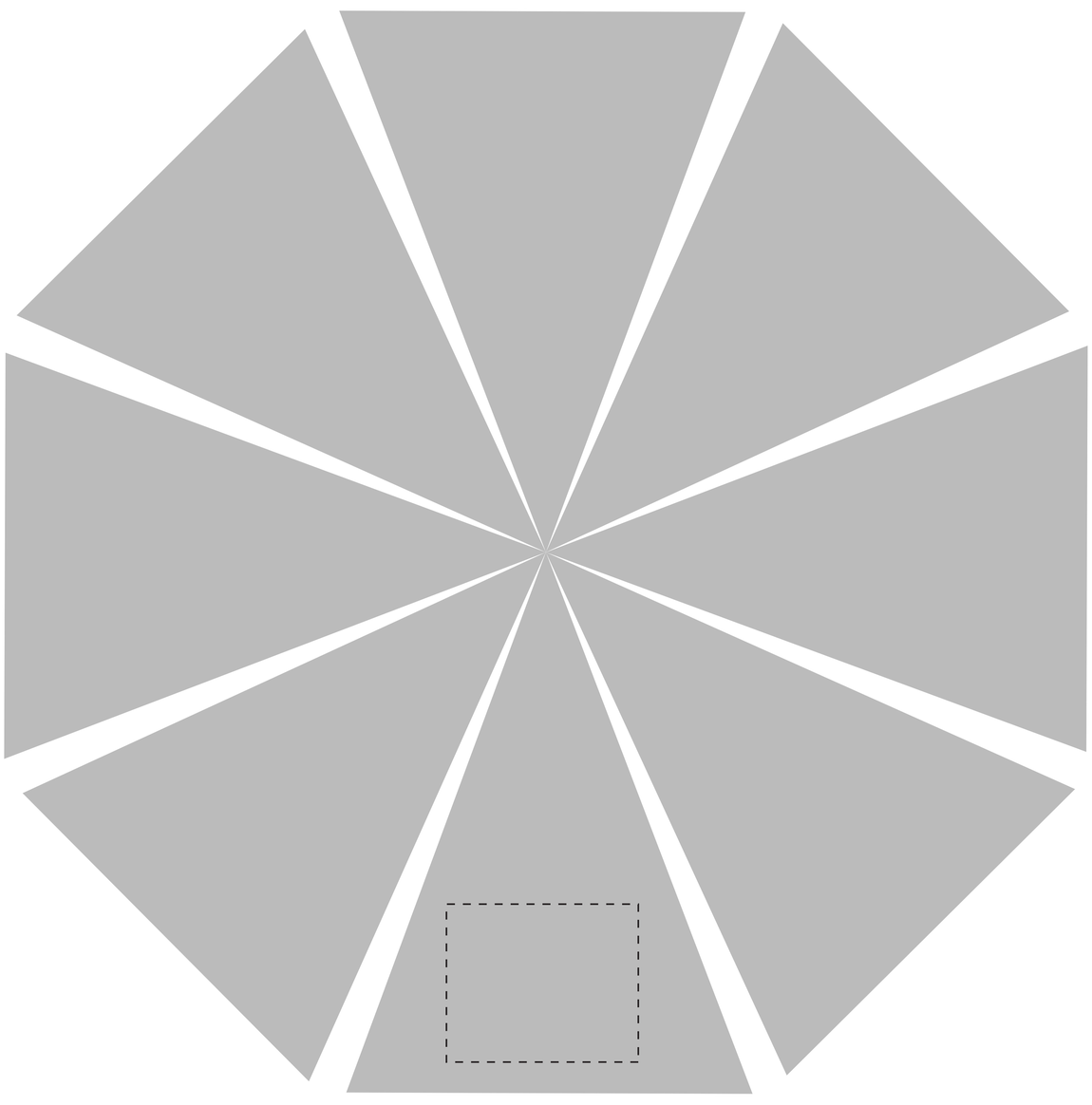

(Top)

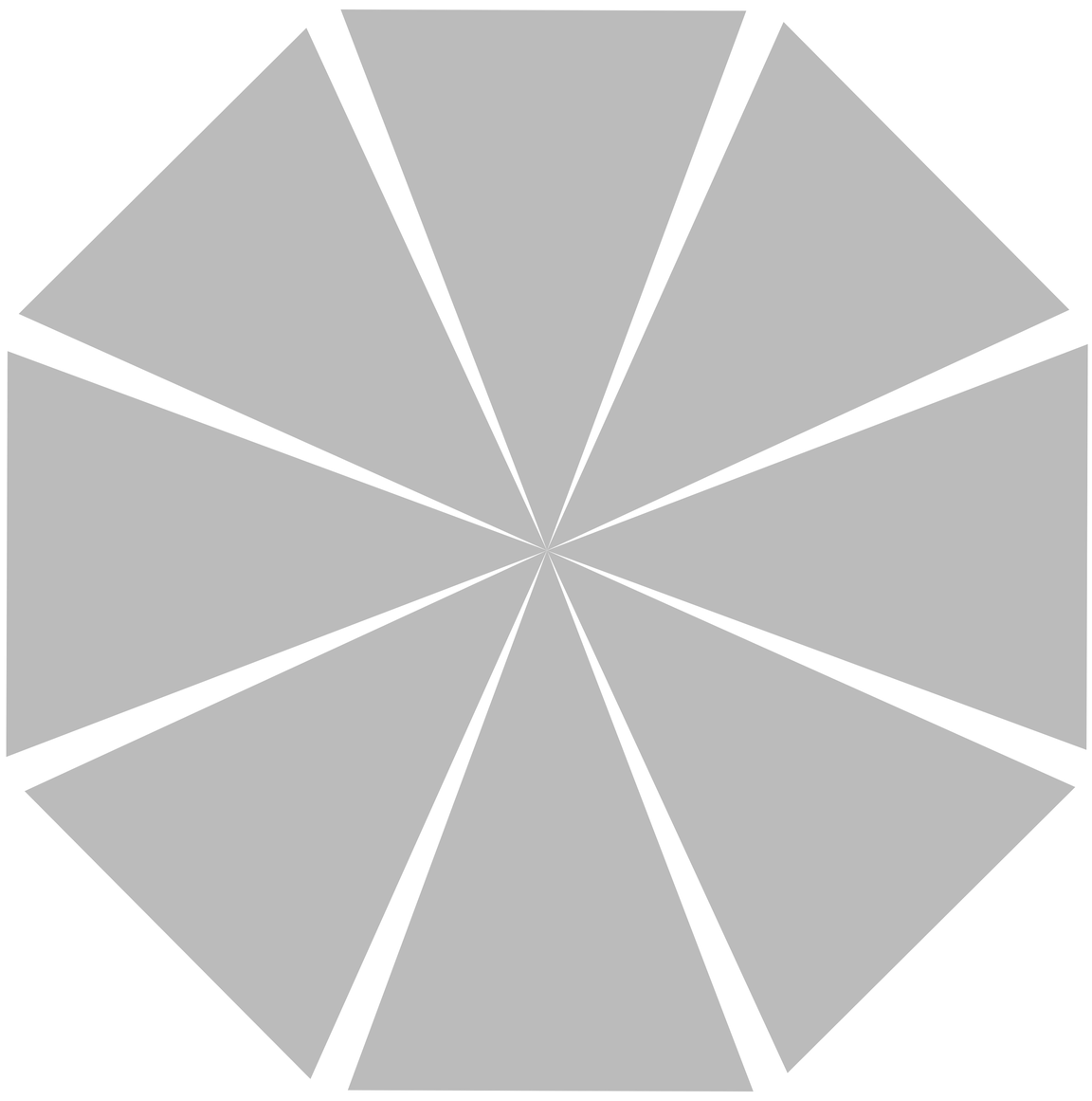

(Underside)

Panels

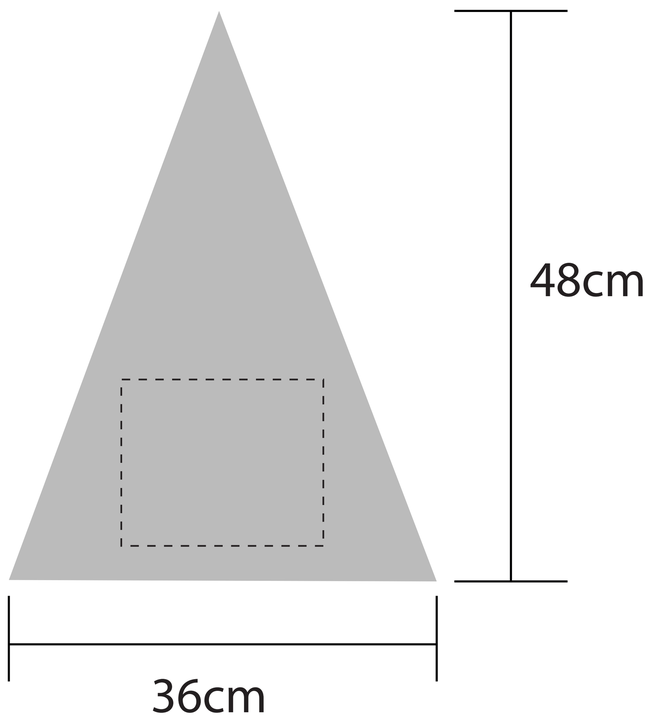

Sleeve Artwork

Sleeve Size: 200 x 45mm (W x H)
Logo Size: 150 x 40mm (W x H)

(Front)

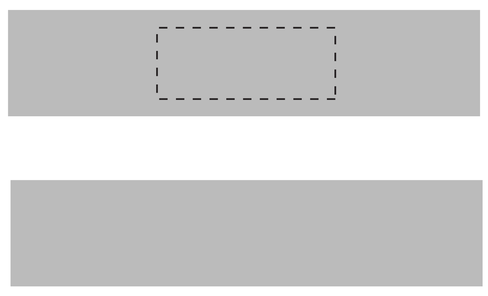

(Back)

Item:	Details:	Please ✓		Proof Number:
Model No.	**SP033**	☐		4
Item Colour:		☐		
Quantity:		☐		
Customer Logo:		☐		
Print:		☐		
Positions:		☐		
Attachments:		☐		
Packaging:	Sleeve (Printed)	☐		
Approval Signature:				
Date:				